INDUSTRIAL POWER UNIT
MODEL 4100



Durable to Last Generations,
Innovative to Meet Your Diverse Grinding Needs

402-528-3861 mightygiant@mightygiant.com www.mightygiant.com

INDUSTRIAL POWER UNIT
MODEL 4100

	Model 4100
Engine Options	John Deere or CAT Engine with Extended Warranty
Horsepower	Up to 900 HP
Fan	Optional Reversing Fan
Clutch	Twin Disc SP318 or Fluid Coupling
Hammer	3/4" or 1" thick
Number of Hammers	42-63 Swinging Hammers
Mill	28" x 56" or 32" x 56"
Mill Bearing Size	3-15/16" Pillow Block
Mill Hammer Pins	6 or 8 Pins 1-1/4" Diameter
Tub Size	10' Interior
Tub Drive	Dual Drive
Elevator Dimensions	24" x 25' Hydraulic Fold Over 24" x 27' Rigid 30" x 25' Fold Over Tub
Elevator Drive	Top Drive
Discharge Auger	16"or 18" Left Hand Auger
Transport Dimensions	Length: 37' 11" Width: 11' 4" Height: 12' 9"
Weight	Approximately 38,000 Lbs.

The Mighty Giant model 4100 is a heavy-duty, commercial grinder designed for the wood industry. It features a variable speed tub with a Plus One controller. All tub and elevator functions are remote controlled. A 25' long, swinging, stacking conveyor for loading trucks, commodity buildings and piles.

The Mighty Giant comes equipped with a CAT or John Deere engine, featuring extended engine warranty coverage.

Standard on every Mighty Giant, from the PTO model to the Hydrafork model, is the hydraulic opening tub for easy access to the mill, hammers and screens, eliminating the need to climb in and out of the tub.

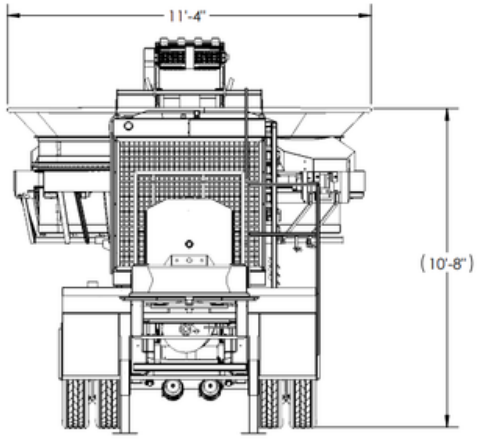

FEATURES

- 25K tandem axle, dual wheel chassis with tube frame
- Tub opens hydraulically for servicing and changing screens
- Tub operation is controlled by a Plus One Governor with remote
- Tub is hydraulically chain-driven with variable speed and reverse
- Elevator drives from the top with rubber lagged pulley
- Hydraulically raise & lower discharge elevator
- Trouble-free 18" high-capacity discharge auger
- Multi-function remote control

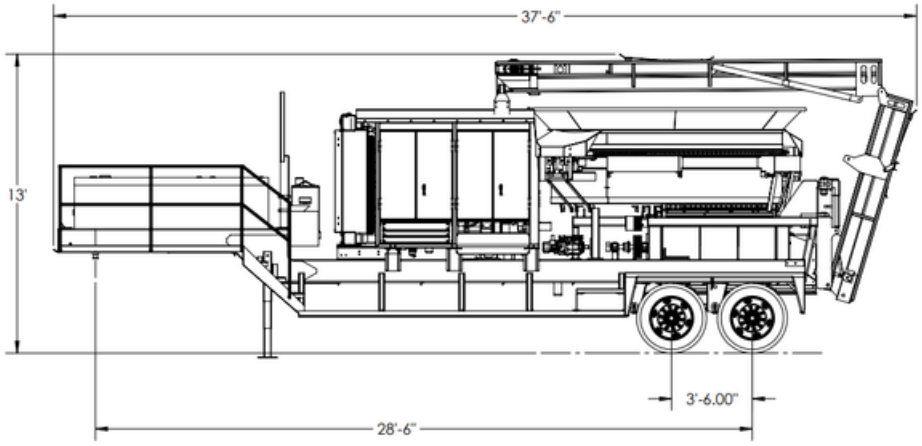

Manufacturer reserves the right to modify designs, materials and specifications without notice.