INDUSTRIAL PTO
MODEL 2150



Durable to Last Generations,
Innovative to Meet Your Diverse Grinding Needs

402-528-3861 mightygiant@mightygiant.com www.mightygiant.com

INDUSTRIAL PTO
MODEL 2150

	Model 2150
Horsepower	Up to 450 HP
Suspension Capacity	20,000 Lbs.
Pin-Hitch Chassis	Tandem Axle
Mill	26" x 48"
Mill Bearing Size	3-15/16" Pillow Block
Hammers	1/2" or 3/4" Thick
Number of Hammers	42 to 54
Tub Size	9' Interior
Elevator Dimensions	24" x 25' Folding
Discharge Auger	16" Right Hand
Transport Dimensions	Length: 22' 5" Width: 11' 4" Height: 12'
Weight	Approximately 18,000 Lbs.

The Mighty Giant model 2150 is a heavy duty, commercial, PTO driven tub grinder, built for the wood and mulch industries. It features a variable speed, hydraulic and electronically driven tub. A hydraulically driven, swinging, stacking conveyor. Both the tub and elevator are run by remote control for operator convenience. The free swinging hammer mill provides a higher quality finished product.

The discharge auger under the mill feeds the top-driven conveyor, allowing trouble free operation and less mess under the grinder.

Standard on every Mighty Giant, from the PTO model to the Hydrafork model, the hydraulic opening tub allows for easy access to the mill, hammers, and screens-without having to climb in and out of the tub.

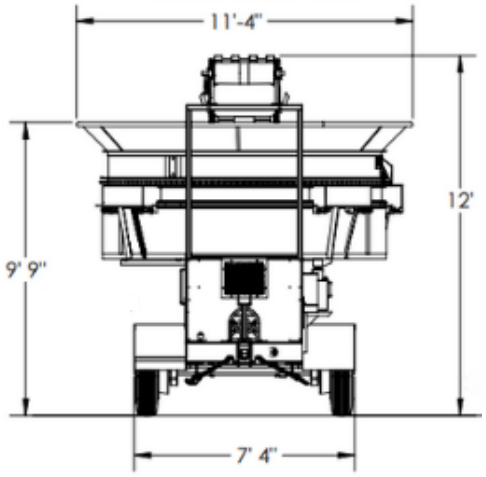

FEATURES

- Tub opens hydraulically for servicing and changing screens
- Tub operation is controlled by a Plus One governor with full remote control
- Tub is hydraulically chain-driven with variable speed and reverse
- Elevator drives from the top with rubber lagged pulley
- Hydraulically raise, lower and swing side to side the discharge elevator
- Trouble-free 16" high-capacity discharge auger
- Highest capacity, most durable PTO grinder available
- Fluid coupler

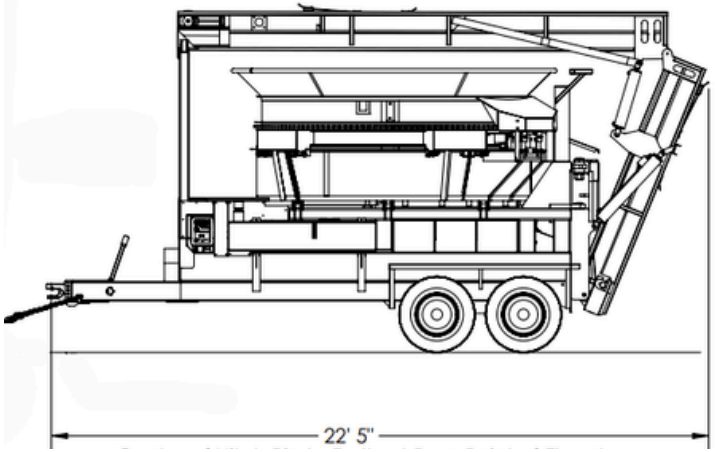

Manufacturer reserves the right to modify designs, materials and specifications without notice.