Mighty GIANT

GRAIN GRINDER
MODEL 1200



Durable to Last Generations,
Innovative to Meet Your Diverse Grinding Needs

402-528-3861 mightygiant@mightygiant.com www.mightygiant.com

GRAIN GRINDER MODEL 1200

	Model 1200
Horsepower	150 to 200 HP
Suspension	8K Hub and Spindle
Mill	26" x 36" with 5" Shaft
Hammers	1/4"
Number of Hammers	120
Hammer Pins	6 Pins each 1-1/4" Diameter
Mill Disks	1/4"
Hopper/Corn Box	Hopper
Elevator	24" Wide x 15' Rigid Hydraulic Driven-Mini Bucket Cleated Belt
Discharge Auger	None
Transport Dimensions	Length: 19' 6" Width: 5' 11" Height: 9' 3"
Weight	Approximately 5,000 Lbs.

The Mighty Giant 1200 is a PTO driven, production model grinder, built for all your grain grinding needs. We built our first corn grinder in the mid 1980's with the customer in mind for grinding several bushels of grain.

Screens can be easily changed for any type of grind that you need. From the mill, the grain is fed onto the 24" wide top-driven conveyor to easily load any vehicle.

All grain grinders have a standard tilt-open box/hopper allowing easy access to the mill, hammers and screens-without having to climb in and out of the box/hopper.

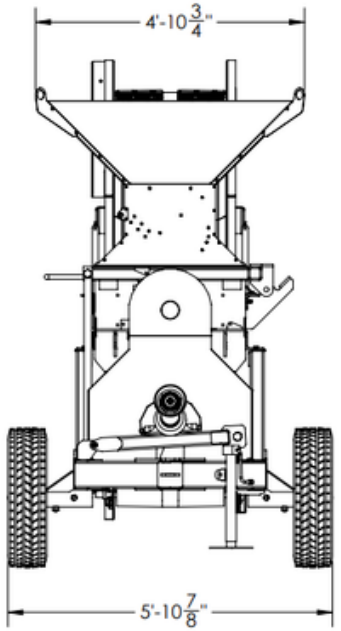

FEATURES

- Hopper opens hydraulically for servicing and changing screens.
- Elevators drive from the top a with rubber lagged pulley.
- Capable of grinding any type of grain.
- Pin-hitch chassis
- High-capacity grinder.

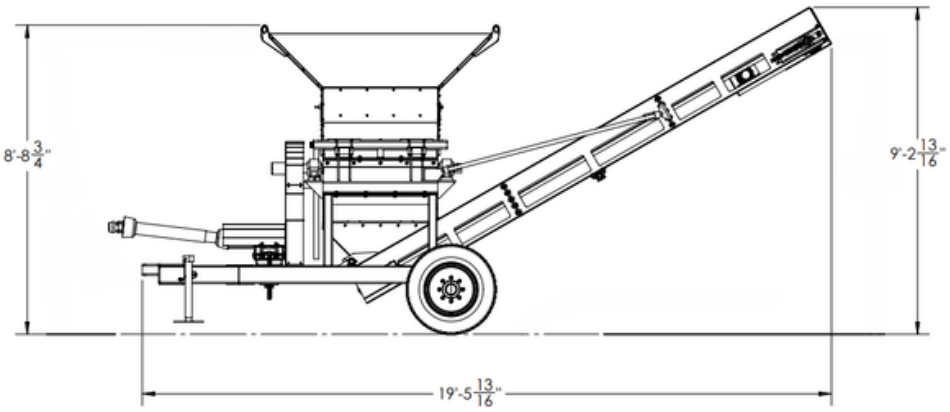

Manufacturer reserves the right to modify designs, materials and specifications without notice.