AGRICULTURAL POWER UNIT
MODEL 4012



Durable to Last Generations,
Innovative to Meet Your Diverse Grinding Needs

402-528-3861 mightygiant@mightygiant.com www.mightygiant.com

AGRICULTURAL POWER UNIT
MODEL 4012

	Model 4012
Engine Options	CAT or John Deere Engine with Extended Warranty
Horsepower	Up to 800 HP
Fan	Optional Reversing Fan
Clutch	Twin Disc SP318 or Fluid Coupling
Hammer	3/8", 1/2" or 3/4" Thick
Number of Hammers	Up to 96
Mill	"26 x 48" or 28" x 50" or 28" x 56"
Mill Bearing Size	3-15/16" Pillow Block
Mill Hammer Pins	6 Pins - 1-1/4" Diameter
Tub Size	9' or 10' Interior
Tub Drive	Single or Dual Drive Hydraulic Motor Drive w/ No. 2100 Heavy Duty, Self Adjusting Chain
Elevator Dimensions	24" x 27' Hydraulic Rigid with Swing
Elevator Drive	Top Drive via Hydraulic Motor
Discharge Auger	14" Left Hand Auger
Transport Dimensions	Length: 37' 6" Width: 11' 4" Height: 13'
Weight	Approximately 38,000 Lbs.

The Mighty Giant model 4012 is a heavy duty, commercial grinder designed for the agricultural and wood industries. It features a variable speed tub with a Plus One controller. All tub and elevator functions are remote controlled. A 27' long, swinging, stacking conveyor for loading trucks, commodity buildings and piles.

The Mighty Giant comes equipped with a CAT or John Deere engine, featuring extended engine warranty coverage.

Standard on every Mighty Giant, from the PTO model to the Hydrafork model, is the hydraulic opening tub for easy access to the mill, hammers and screens, eliminating the need to climb in and out of the tub.

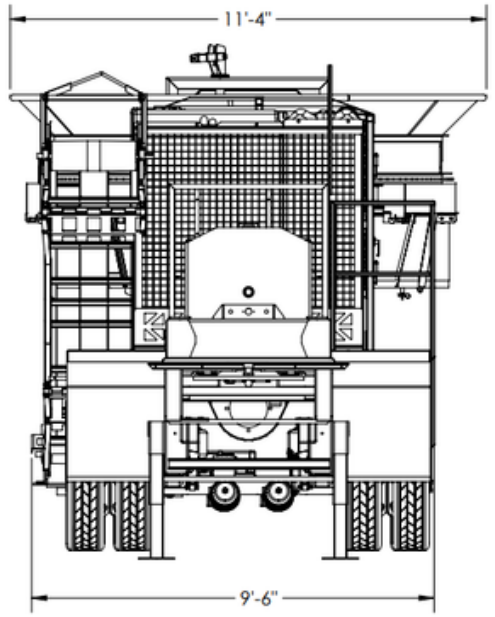

FEATURES

- 25K air ride tandem axle, dual wheel chassis with tube frame
- Tub opens hydraulically for servicing and changing screens
- Tub operation is controlled by a Plus One governor
- Tub is hydraulically chain-driven with variable speed and reverse
- Elevator drives from the top with rubber lagged pulley
- Hydraulically raise & lower discharge elevator
- Trouble-free 14" high-capacity discharge auger
- Multi-function remote control

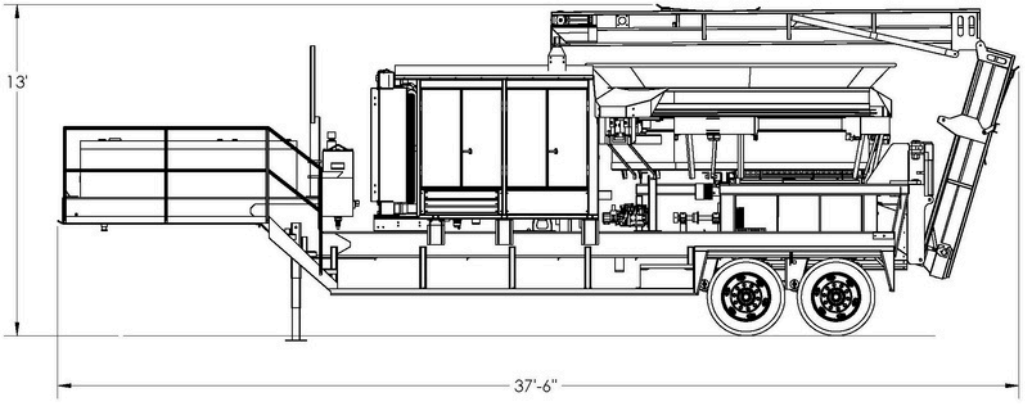

Manufacturer reserves the right to modify designs, materials and specifications without notice.