AGRICULTURAL PTO
MODEL 1050



Durable to Last Generations, Innovative to Meet Your Diverse Grinding Needs

402-528-3861 mightygiant@mightygiant.com www.mightygiant.com

AGRICULTURAL PTO
MODEL 1050

	Model 1050
Horsepower	Up to 450 HP
Suspension Capacity	16,000 Lbs.
Pin-Hitch Chassis	Single Axle
Mill	26"x 48" with 5" Shaft
Mill Bearing Size	3-15/16" Pillow Block
Hammer	3/8" Thick
Number of Hammers	84
Tub Size (Interior)	9' Interior
Elevator	24" Wide x 25' Hydraulic Folding - 1-1/2" Cleated Belt
Discharge Auger	14" Right Hand Auger
Transport Dimensions	Length: 22' 5" Width: 11' 4" Height: 12'
Weight	Approximately 14,720 Lbs.

The Mighty Giant model 1050 is built with the smaller producer in mind, a simple machine ready to handle all the rigors of grinding forage and grain.

It has many of the same features of the 1050, such as the standard tilt-open tub which allows for easy access to the mill, hammers and screens. A standard 14" discharge auger under the mill and a fold-over the tub style elevator.

The model 1050 is built with the Mighty Giant experience that is put into all the grinders we build.

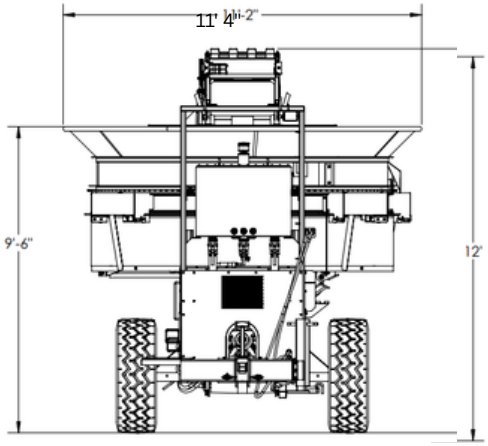

FEATURES

- Tub opens hydraulically for servicing and changing screens
- Tub operation is controlled by a Plus One governor
- Tub is hydraulically chain-driven with variable speed and reverse
- Elevator drives from the top with rubber lagged pulley
- Hydraulically raise & lower discharge elevator
- Trouble-free 14" high-capacity discharge auger
- Capable of grinding any type of forage or grain
- Highest capacity, most durable PTO grinder available

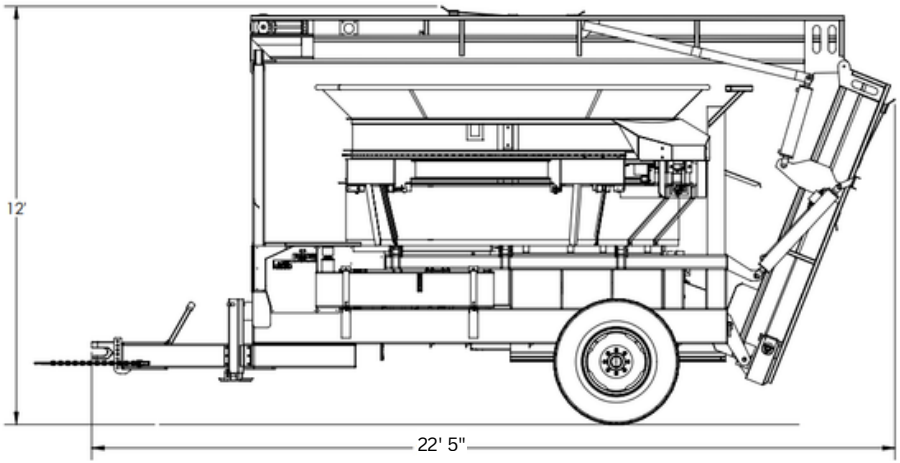

Manufacturer reserves the right to modify designs, materials and specifications without notice.