AGRICULTURAL PTO
MODEL 2050



Durable to Last Generations,
Innovative to Meet Your Diverse Grinding Needs

402-528-3861 mightygiant@mightygiant.com www.mightygiant.com

AGRICULTURAL PTO
MODEL 2050

	Model 2050
Horsepower	Up to 450 HP
Suspension Capacity	20,000 Lbs.
Pin-Hitch Chassis	Tandem Axle
Mill	26"x 48" with 5" Shaft
Mill Bearing Size	3-15/16" Pillow Block
Hammer	3/8" or 1/2" Thick
Number of Hammers	84
Tub Size (Interior)	9' Interior
Elevator	24" Wide x 25' Hydraulic Folding with 1-1/2" Cleated Belt
Discharge Auger	14" Right Hand Auger
Transport Dimensions	Length: 24' 4" Width: 11' 4" Height: 12'
Weight	Approximately 19,540 Lbs.

The Mighty Giant model 2050 is built with the smaller producer in mind, a simple machine ready to handle all the rigors of grinding forage and grain.

A 26" x 48" free swing hammer mill is used for higher production rates and better finished product. The standard 14" discharge auger under the mill feeds the top driven conveyor, allowing trouble free operation and less mess under the grinder.

Standard on every Might Giant, from the PTO model to the Hydrafork model, is a hydraulic opening tub for easy access to the mill, hammers, and screens.

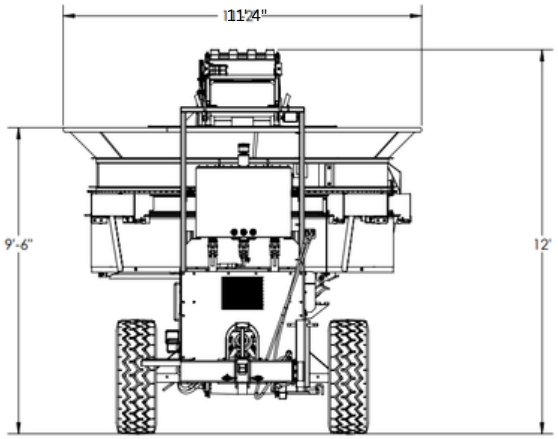

FEATURES

- Tub opens hydraulically for servicing and changing screens
- Tub operation is controlled by a Plus One governor w/remote
- Tub is hydraulically chain-driven with variable speed and reverse
- Elevator drives from the top with rubber lagged pulley
- Hydraulically raise, lower and swinging side to side discharge elevator
- Trouble-free 14" high-capacity discharge auger
- Capable of grinding any type of forage or grain
- Highest capacity, most durable PTO grinder available
- Multi-functional remote control to run the tub speed, forward and reverse. It also controls the raising, lowering and swing of the elevator.

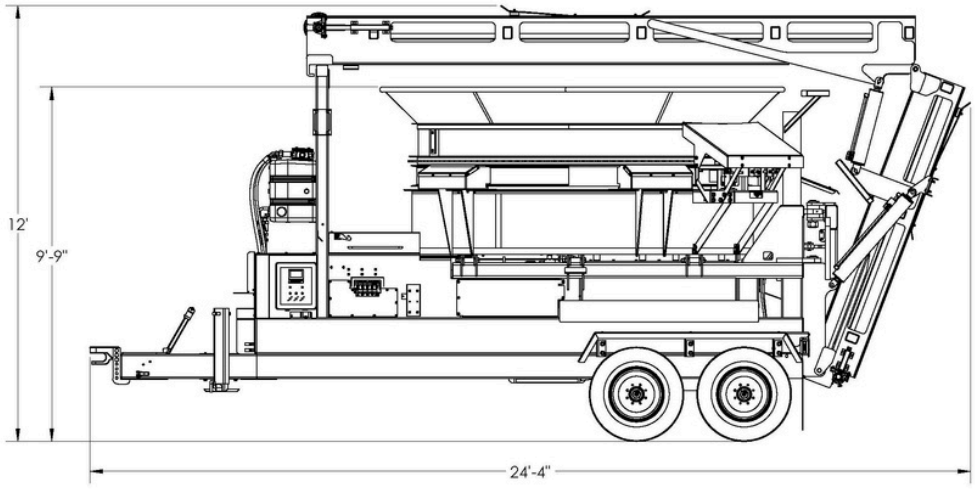

Manufacturer reserves the right to modify designs, materials and specifications without notice.