INDUSTRIAL PTO
MODEL 4115



Durable to Last Generations,
Innovative to Meet Your Diverse Grinding Needs

402-528-3861 mightygiant@mightygiant.com www.mightygiant.com

INDUSTRIAL PTO MODEL 4115

	Model 4115
Hammer	1/4", 3/8", 1/2" or 3/4" Thick
Number of Hammers	84 to 96
Mill	26" x 48" or 28" x 56"
Mill Bearing Size	522 Mill Bearing
Mill Hammer Pins	6 Pins - 1-1/4" Diameter
Tub Size	10' Interior
Tub Drive	Single or Dual Hydraulic Drive Motor w/ No. 2100 Heavy Duty Chain
Elevator Dimensions	24" x 25' Hydraulic Fold Over the Tub w/ Swing
Elevator Drive	Hydraulic Motor
Discharge Auger	16" Left Hand Auger
Transport Dimensions	Length: 22' 5" Width: 12' 2" Height: 12' 6"
Weight	Approximately 22,420 Lbs.

The Mighty Giant model 4115 is a heavy duty, industrial tub grinder, built for the wood and mulch industries. It features an electronically controlled, variable speed, hydraulic driven tub and a hydraulically driven, swinging, stacking elevator. Remote controlled tub and elevator functions are optional for operator convenience. The Mighty Giant mill is a free swinging hammer mill for a higher quality finished product.

The discharge auger under the mill feeds the top-driven elevator, allowing trouble free operation and less mess under the grinder.

Standard on every Mighty Giant, from the PTO model to the Hydrafork model, is the hydraulic opening tub for easy access to the mill, hammers, and screens-without having to climb in and out of the tub.

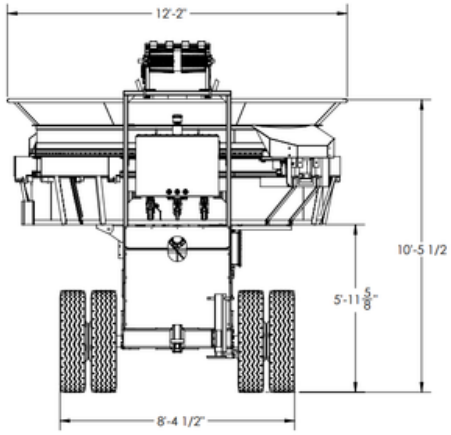

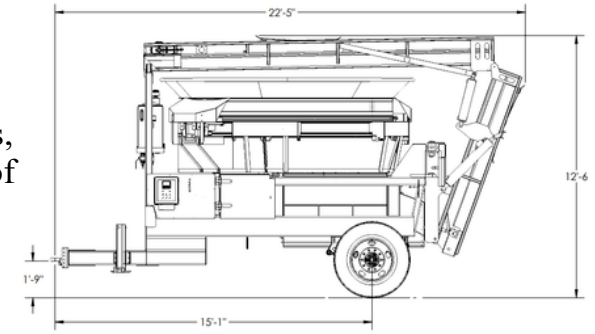

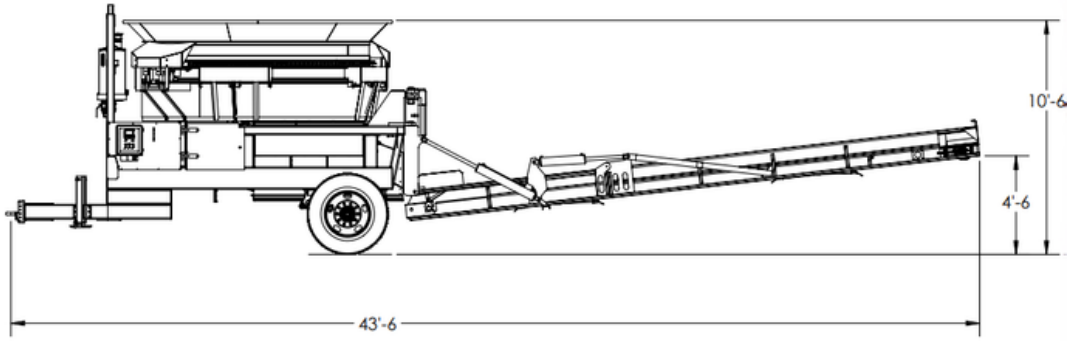

FEATURES

- Tub opens hydraulically for servicing and changing screens
- Tub speed/direction is controlled by a Plus One governor
- Tub is hydraulically chain-driven with variable speed and reverse
- Elevator drives from the top with rubber lagged pulley
- Hydraulically raise, lower and swing side to side the discharge elevator
- Trouble-free high-capacity discharge auger
- Highest capacity, most durable grinder available
- Multi-functional remote control

Manufacturer reserves the right to modify designs, materials and specifications without notice.